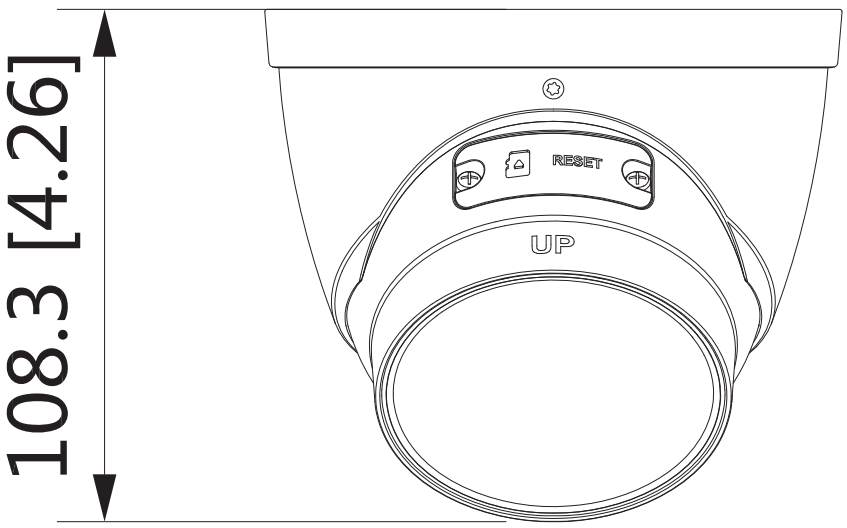
108.3 [4.26]
RESET
UP

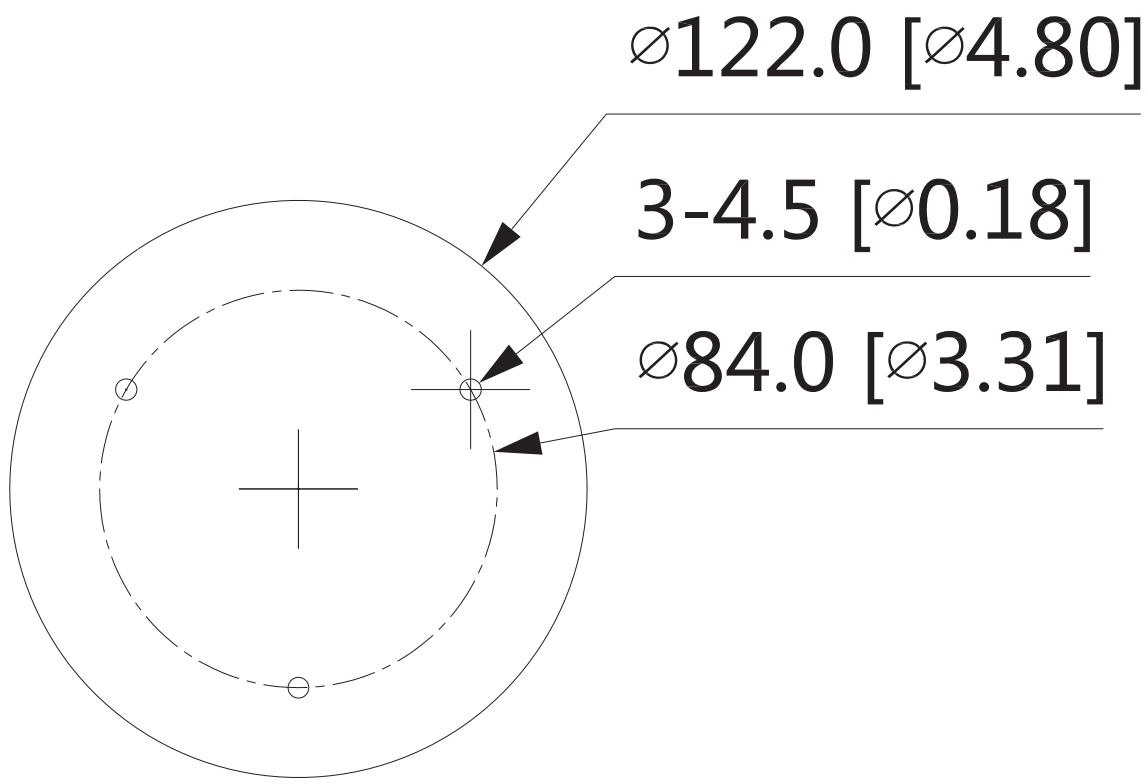
∅122.0 [∅4.80]
3-4.5 [∅0.18]
∅84.0 [∅3.31]