Easy Keypad with Doorbell
(Outdoor)

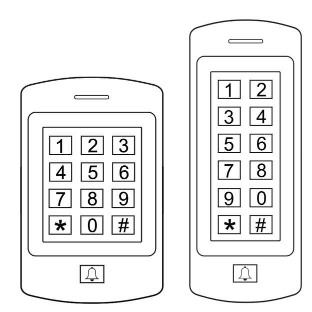

Wide   Slim

User Manual

INTRODUCTION

The device is a waterproof standalone Access Control with integrated keypad and card reader. It is an easy to install and operate device, designs in as less as 6 wires for mounting, with user-friendly programming. The compact design makes it a good choice for door access.

The device is housed in a strong Zinc Alloy electroplated case. It supports up to 1000 users in multiple access configurations (Card Only, Card or PIN, or Card + PIN). The built in card reader supports EM 125KHz frequency cards.

The device with 'remote control' function is optional.
(Remote control to open the door remotely)

Features
> Waterproof, conforms to IP66
> Vandal Resistant Enclosure
> Backlit Keypad
> Multi-color LED status display
> One Programmable Relay Output
> 1000 Users(990 Normal Users+10 Visitor Users)
> Access Mode: Card, PIN, Card + PIN
> Low power consumption (50mA)
> Anti-Tamper Alarm
> Latch Mode to hold door or gate open
> 9-18V DC Power input

Specifications

User Capacity	**1000 Cards/PINs**
Normal Users	990
Visitor Users	10
Operating Voltage	**9-18V DC**
Idle Current	50mA
Active Current	80mA
Keypad	**12 Key**
Proximity Card Reader	**EM**
Radio Technology	125 KHz Industry Standard Proximity Card
Read Range	3-6cm
Wiring Connections	Relay Output, Exit Button
Relay	**One (NO, NC, Common)**
Adjustable Relay Output Time	0-99 Seconds (5 seconds default)
Lock Output Load	3 Amp Maximum
Environment	**Meets IP66**
Operating Temperature	-40℃~60℃, -40℉~140℉
Operating Humidity	10%-90% Non-condensing

Physical	**Zinc-Alloy Enclosure**
Surface Finish	Powder Coat
Dimensions	L116 X W76 X H26 (mm) -- Wide L136 X W56 X H25 (mm) -- Slim
Unit Weight	600g (Wide), 490g (Slim)
Shipping Weight	700g (Wide), 550g (Slim)

Carton Inventory

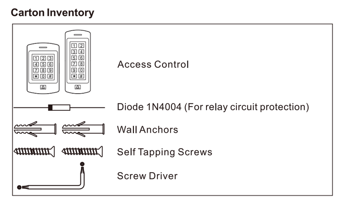

INSTALLATION

> Remove the back cover from the unit
> Drill 2 holes(A,C) on the wall for the screws and one hole for the cable
> Knock the supplied rubber bungs to the screw holes(A,C)
> Fix the back cover firmly on the wall with 4 flat head screws
> Thread the cable through the cable hole(B)
> Attach the unit to the back cover.

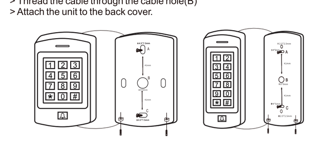

Wiring

Wire Insulation Colour	Function	Notes
Yellow	OPEN	Request to Exit input(REX)
Red	Power +	9-18 Votes DC Regulated Power Input
Black	GND	Ground
White	NO	Normally Open Relay Output
Brown	COM	Common Connection for Relay Output
Green	NC	Normally closed Relay Output
Grey	Doorbell A	Contact for doorbell
Blue	Doorbell B	Contact for doorbell

Connection Diagram
Common power supply:

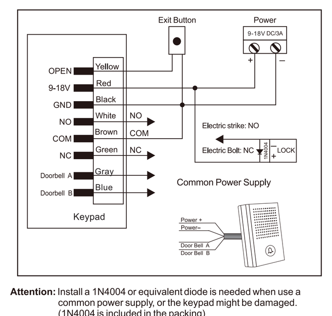

Attention: Install a 1N4004 or equivalent diode is needed when use a common power supply, or the keypad might be damaged. (1N4004 is included in the packing)

Access Control Power Supply:

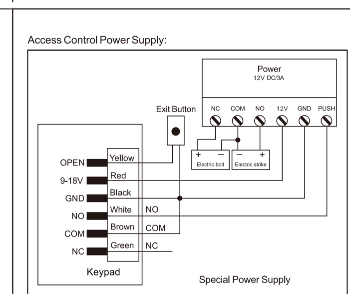

PROGRAMMING

Programming will vary depending on access configuration. Follow the instructions according to your access configuration.

Programming 1– – – – – – – – – – – Configure the device

Change the configure settings according to your application (optional). Multiple configuration settings can be changed at one time: enter program mode, change desired settings, then exit program mode.

Set Master Code
The 4-6 digit Master Code is used to prevent unauthorized access to the system. To interface with the device the manager will need a Master Code (factory default code: 123456).We highly recommend immediate update and record of your Master Code.

Simplified Instruction	
Function Description	**Operation**
Enter the Programming Mode	**★ (Master Code) #** (123456 is the default factory master code)
Change the Master Code	**0 (New Master Code) # (Repeat New Master Code) #** (code: 4-6 digits)
Add Card User	**1 (Read Card) #**
Add PIN User	**1 (User ID) # (PIN) # OR 1 (PIN) #** The ID number is any number between 0 ~ 989.The PIN is any 4-6 digits between 0000 ~ 999999
Delete User	**2 (Read Card) #** **2 (User ID) #** **2 (User ID) #**
Exit from the programming mode	★
How to be granted access	
Card User	**Read card**
PIN User	**Enter (PIN) #**

Programming Step	Keystroke Combination
1. Enter Program Mode	**★ (Master Code) #**
2. Update Master Code	**0 (New Master Code) #** **(Repeat New Master Code) #**
3. Exit Program Mode	★

Set Access Configuration
There are 3 types of access configurations for the device
> **Card or PIN (Default)**: The User must present a valid Card to the device or enter their PIN code followed by the # key, in order to be granted access.
> **Card Only**: The User must present a valid Card to the device in order to be granted access.
> **Card + PIN**: The User must first present a valid Card to the device and then enter their PIN code followed by the # key, in order to be granted access.

Programming Step	Keystroke Combination
1. Enter Program Mode	**★ (Master Code) #**
2. Card or PIN OR 2. Card + PIN OR 2. Card only	**3 0 #** **3 1 #** **3 2 #**
3. Exit Program Mode	★

Set Relay Configuration
The relay configuration sets the behaviour of the output relay on activation.

Programming Step	Keystroke Combination
1. Enter Program Mode	**★ (Master Code) #**
2. Pulse Mode OR 2. Latch Mode	**4 (1-99) #** The relay time is 1-99 seconds. (1 is 50mS.) Default is 5 seconds. **4 0 #** Sets the relay to ON/OFF Latch mode
3. Exit	★

Set Strike-out Alarm
The strike-out alarm will engage after 5 failed card/PIN attempts. Default is OFF. The strike-out alarm can be set to deny access for 10 minutes after engaging or it can be set disengage only after entering a valid card/PIN or Master code.

Programming Step	Keystroke Combination
1. Enter Program Mode	**★ (Master Code) #**
2. Strike-Out OFF OR 2. Strike-Out ON OR 2. Strike-Out ON Set alarm time	**6 0 #** (factory default) **6 1 #** Access will be denied for 10 minutes **6 2 #** The buzzer alarms. 5 (0 ~ 3) #, Factory default is 1 minute.
3. Exit	★

Programming 2 – – – – – – – – – Program Cards and PINS

Programming will vary depending on the access configuration. Follow the instructions according to your access configuration.

GENERAL PROGRAMMING INFORMATION
> **User ID Number**: Assign a user ID number to the access code in order to keep track of the users of access cards or PINS. The nomral user ID can be any number from 0~989, and the 10 groups of visitoris from 990~999. IMPORTANT: User IDs do not have to be proceeded with any leading zeros. Recording of User ID is critical. Modifications to user data require either the card or the User ID be available.
> **Proximity Card**: 125 KHz industry standard 26 bits EM Proximity Card.
> **Keypad PIN**: The PIN can be any 4~6 digits between 0000~999999 (except 1234 which is reserved for factory testing).

ACCESS CONFIGURATION: CARD OR PIN & CARD ONLY -----------

Add User Cards

Programming Step	Keystroke Combination
1. Enter Program Mode	**★ (Master Code) #**

2. Add Card: Using Auto ID (Allows the device to assign Card to next available User ID number) OR 2. Add Card: Select Specific ID (Allows manager to define a specific User ID to associate the card to)	**1 (Read Card) #** Cards can be added continuously. **1 (User ID) # (Read Card) #** The user ID is any number from 0~989.
3. Exit Program Mode	★

Delete User Cards

Programming Step	Keystroke Combination
1. Enter Program Mode	**★ (Master Code) #**
2. Delete Card: By card OR 2. Delete Card: Select Specific ID	**2 (Read Card) #** Cards can be deleted continuously. **2 (User ID) #** The user ID is any number from 0~989.
3. Exit	★

Add or Delete a PIN

Programming Step	Keystroke Combination
1. Enter Program Mode	**★ (Master Code) #**
2. Add a PIN Assigns PIN to user ID number OR 2. Delete a PIN Deletes the User ID number and associated PIN	**1 (User ID) # (PIN) # OR 1 (PIN) #** PINS can be added continuously. **2 (User ID) # OR 2 (PIN) #** PINS can be deleted continuously.
3. Exit	★

Change a PIN
This operation is executed from outside of Program Mode.

Programming Step	Keystroke Combination
1. Change a PIN	**★ (User ID #) (Old PIN #) (New PIN #) (New PIN #)**

ACCESS CONFIGURATION: CARD+PIN-----------------------------------
Add a Card+ PIN User

Programming Step	Keystroke Combination
1. Enter Program Mode	**★ (Master Code) #**
2. Add a User Card by ID number	**1 (User ID) # (Read Card) #**
3. Exit Program Mode	★
4. Add PIN	**★ (Read Card) (1234#) (New PIN #) (New PIN #)** This operation is executed from outside of Program Mode

Change PIN
Allows card user to update the PIN for their card + PIN User ID. This operation is executed from outside of Program Mode.

Programming Step	Keystroke Combination
1. Change PIN using a Card OR 1. Change PIN using ID	**★ (Read Card) (Old PIN #) (New PIN #) (New PIN #)** **★ (User ID #) (Old PIN #) (New PIN #) (New PIN #)**

Delete Card by User ID
Deleting by ID number will clear cards and PINS

Programming Step	Keystroke Combination
1. Enter Program Mode	**★ (Master Code) #**
2. Delete User Card by User ID	**2 (User ID) #**
3. Exit Program Mode	★

Visitor User Setting
There are 10 groups Visitor PIN/card available, the users can be specified up to 10 times of usage, after a certain number of times, i.e. 5 times, the PIN/card become invalid automatically.

Programming Step	Keystroke Combination
1. Enter Program Mode	**★ (Master Code) #**
2. Add Visitor PIN User OR 2. Add Visitor Card User 2.Delete Visitor Users	8 (0~9 #) (User ID #) (PIN #) PIN is any 4~6 digits number except 1234 8 (0~9 #) (User ID #) (Read Card #) 2 (User ID #)
3. Exit Program Mode	★
Note: Number of time is 0~9, 0=10 times User ID number must be any number between 990~999 Visitor PIN/card must be unique, should be distinguished from common PIN and card	

OTHERS

Reset to Factory Default:
1. Power off
2. Press the * Button, hold it and power on
3. There will be two beeps, release the button, then will have one beep
The device reset to factory default successfully.

Remark: Reset to factory default, the user's information is still retained.

Erase all Users
This will delete ALL User data.
1. Enter Program Mode by press: *(Master Code) #.
2. Press 20000 #
3. Exit: *
All configuration data is retained.

Reset Strike-Out Alarm
Enter Master Code or Valid Card/PIN to silence

Sound and Light Indication

Operation Status	Red LED	Green LED	Sounds
Power on	Bright		Short Single Beep
Stand by	Bright		
Press Keypad	Flashing		Short Single Beep
Enter Master Code Entry Mode	ON		Short Single Beep
In program mode	ON	Single Flash	Short Single Beep
Entered Program Step Successfully	ON	Single Flash	Short Single Beep
Entered Program Step Incorrectly			Short Single Beep
Exit from the programming mode	Bright		3 Short Beeps
Entry Granted		ON	Short Single Beep
Open lock	Green light bright		One beep
Alarm Mode Engaged	Flashing		Alarm
Alarm	Red light Shines quickly		Beeps
Pressing * Toggles Standby / Master Code Entry	ON/Flashing		Short Single Beep